Drawbar Trailers

TECHNICAL
ADVISORY
PROCEDURE

AUSTRALIAN TRUCKING ASSOCIATION

INDUSTRY TECHNICAL COUNCIL

Developed by the ATA Industry Technical Council

DISCLAIMER
The ATA makes no representations and provides no warranty that the information and recommendations contained in this Technical Advisory Procedure are suitable for use by or applicable to all operators, up to date, complete or without exception. Reliance or use upon the information or recommendations is voluntary and the user accepts all risks and responsibility for any such reliance or use and to the maximum extent permitted by law the ATA excludes all liability to any person arising directly or indirectly out of any such reliance or use.

About this Technical Advisory Procedure (TAP):
This Technical Advisory Procedure is published by the Australian Trucking Association Ltd (ATA) to assist the road transport industry to improve in-service maintenance and the operation of drawbar trailers. This TAP is not, nor is it intended to be, complete or without exceptions.

The Technical Advisory Procedure is a guide only, and its use is entirely voluntary. Recommendations or procedures may not be suitable for or applicable to all operators. Operators should consider their own circumstances, practices and procedures when using this Technical Advisory Procedure.

Operators must comply with the Australian Design Rules (ADRs), the Australian Vehicle Standards Rules, roadworthiness guidelines and any specific information and instructions provided by manufacturers in relation to the vehicle systems and components.

No endorsement of products or services is made or intended. Brand names, where used in this Technical Advisory Procedure, are for illustrative purposes only.

Suggestions or comments about this Technical Advisory Procedure are welcome. Please write to the Industry Technical Council, Australian Trucking Association, 25 National Circuit, Forrest ACT 2603.

About the ATA Industry Technical Council:
The Industry Technical Council (ITC) is a standing committee of the Australian Trucking Association (ATA). The ITC's mission is to improve trucking equipment, its maintenance and maintenance management. The ITC was established in 1994.

As a group, the ITC provides the ATA with robust professional advice on technical matters to help underpin the ATA's evidence-based policymaking. It is concerned with lifting technical and maintenance standards, improving the operational safety of the heavy vehicle sector, and the development of guidelines and standards for technical matters.

ITC performs a unique service in the Australian trucking industry by bringing operators, suppliers, engineers, and other specialists together in a long-term discussion forum. Its members provide expert and independent advice in the field to inform the work of the ITC. The outcomes from ITC benefit all ITC stakeholders and the heavy vehicle industry at large.

The ITC operates under the Australian Trucking Association's Council, which formulates industry policy for implementation by the organization.

Joining ITC:
We welcome applications to join the ITC. For further information, please call the ATA on (02) 6253 6900 or email *ata@truck.net.au* or download information from the ATA website *www.truck.net.au*, follow the links under the members tab to join.

Version Index
Version Number: 1.0
Written by ITC: ITC February 2021
Approved by ATA Council: 24 February 2021

Drawbar Trailers

Developed by the ATA Industry Technical Council

Edition 1.0 – February 2021

TABLE OF CONTENTS

1. INTRODUCTION 3

2. DEFINITIONS 3

3. TECHNICAL CONSIDERATIONS 6

3.1 Coupling Selection & Installation 6

3.2 Inspection and Maintenance 9

3.3 Airlines 11

3.4 Drawbar design and maintenance 12

3.5 Safety Chains 13

3.6 General 14

4. COUPLING AND UNCOUPLING: 15

4.1 Coupling 15

5. SAFETY CONSIDERATIONS 18

---

1. INTRODUCTION

This Technical Advisory Procedure (TAP) has been developed by the ATA Industry Technical Council (ITC) to provide operators with consistent and clear, advice about the: design, fabrication, and maintenance of drawbar trailers.

All procedures demand consistency, Australia has a very diverse fleet with some equipment sourced globally. Therefore, it is recommended that training should include different equipment which may be used across a fleet.

2. DEFINITIONS

For a comprehensive list of definitions, refer to the *ATA Technical Dictionary*.

DRAWBAR CONFIGURATIONS:

Hinged Drawbar – **can move freely** in the vertical plane and does not support any vertical load nor transfer vertical load to the towing coupling.

Rigid Drawbar – **cannot move freely** in the vertical plane. Supports vertical load and transfers vertical load to the towing coupling.

Definition of trailer types:

- **CONVERTER DOLLY:** A '*pig trailer*' with a '*fifth wheel coupling*', designed to convert a '*semi-trailer*' into a '*dog trailer*'.

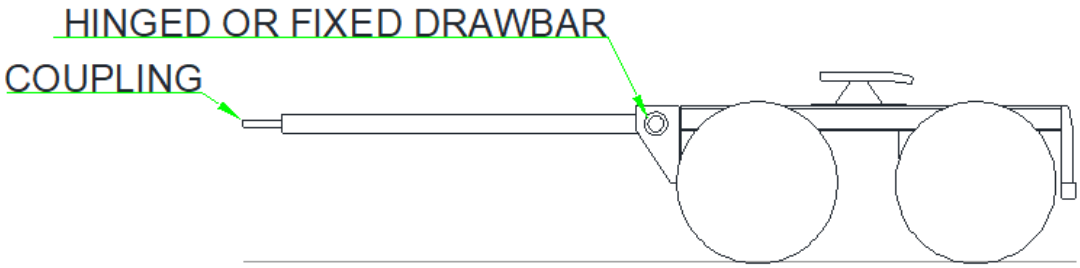

- **DOG TRAILER:** A trailer with 2 '*axle groups*' of which the front '*axle group*' is steered by connection to the drawing vehicle.

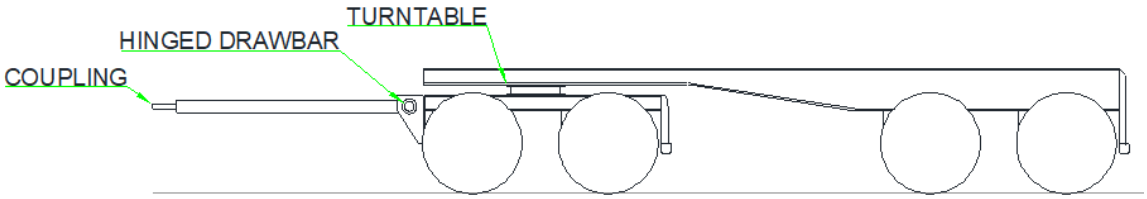

- **PIG TRAILER:** A trailer having one '*axle group*' near the middle of the length of the goods-carrying surface.

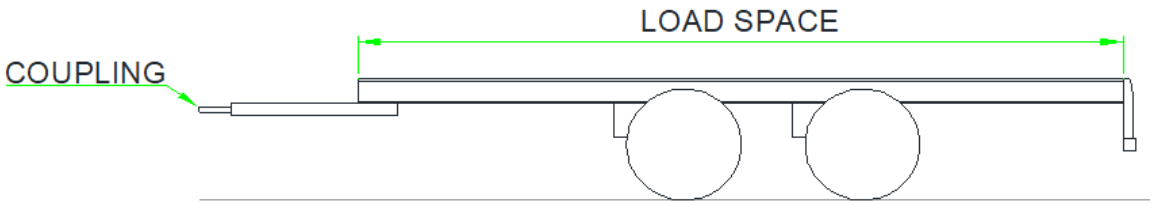

- **TAG TRAILER:** Is a semi-trailer (with one '*axle group*' or single axle towards the rear) with a GTM greater than 4.5 tonnes, includes a cargo carrying load space and is so constructed that:
  - the design unladen coupling height is ≤ 950 mm,
  - the trailer's rated imposed static vertical load at the coupling is:
    - ≥ 10% of the trailer GTM.

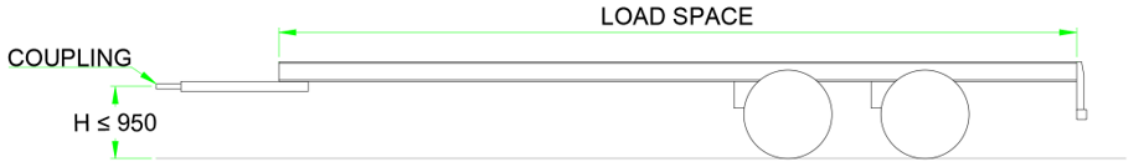

3. TECHNICAL CONSIDERATIONS

3.1 Coupling Selection & Installation

3.1.1 Coupling and Tow Eye Selection:

For drawbar trailers the couplings will most likely be:

Automatic Pin Coupling

Ball Coupling

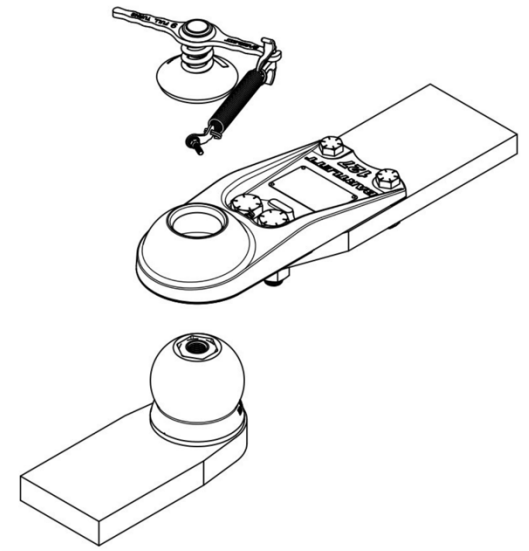

Hook Coupling

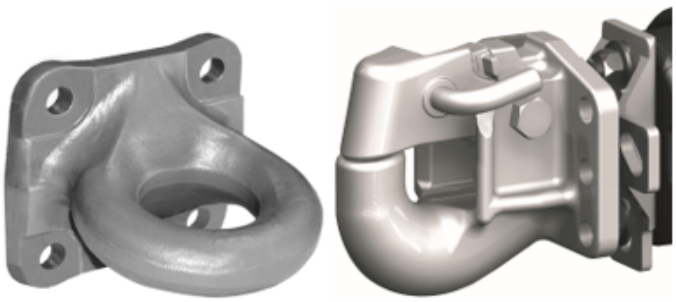

- *The type of trailer coupling and tow eye used will depend on the type of drawbar trailer that is being towed. Drawbars will be either a hinged or rigid design. Hinged drawbars are common on dog trailers and converter dollies; some tri-axle pig trailers also use a hinged drawbar. Rigid drawbars are used on tag trailers and pig trailers; and, converter dollies can also have a rigid drawbar.*

TOWING EYE STYLE	Description	 Hinged Drawbar (includes Converter Dollies)	 Rigid Drawbar (includes Converter Dollies)
	WELD-ON	✓	✗
	BOLT-ON	✓	✗
	FLANGED	✓	✓
	CLAMPED	✓	✓

Key things to note when selecting a coupling and tow eye:

- *The tow eye must be suited to the type of coupling, in accordance with the manufacturer's instructions*
- *The tow eye and the coupling do not have to have the same rating, but both must be rated adequately for the towing application.*
- *Rigid drawbar trailers require the tow eye and coupling to have a V-rating.*
- *Weld-on and bolt-on tow eyes are not suitable for rigid drawbar trailers.*

3.1.2 Determining D-value and V-value:

The coupling and drawbar design requirements are dependent on the application specifics, see ADR 62/..; and, converter dollies and trailers used in road trains must additionally comply with the requirements of ADR 63/.. D and V value requirements must be determined with reference to Australian Standard AS2213.1

Coupling selection may be limited by D and/or V-value design requirements and maximum static vertical loading. The D-rating and the V-rating of the tow coupling must not be less than that of the determined D and V values required for the combination (*refer AS2213.1 and AS 4968.1*). The specific application and

benefits of each coupling style need to be considered. Other aspects that should be considered when selecting a coupling are the ability to couple safely, the amount of articulation needed and the package space available to mount the coupling. A fifth wheel coupling should not be excluded as an option.

Design requirements for couplings and drawbars depend on the vertical and horizontal loads of their specific application. ADR 62/.. defines the rules for coupling and drawbar design requirements. The design requirements of ADR 63/.. must also be followed for converter dollies and trailers used in road trains. D and V value requirements can be calculated using the method shown in Australian Standard AS2213.1.

3.1.3 Installation:

Tow couplings and tow eyes must be installed in accordance with ADR 62/02. Vehicle Standards Bulletin #6 (VSB6): *National Code of Practice Heavy Vehicle Modifications* is the national standard for the most common modifications made to heavy vehicles. VSB #6 Section P1 is applicable to drawbar couplings and tow eyes. #6 P1 will ensure compliance with ADR 62/02.

VSB #6 Section P1 states that where installation guidelines are provided by the vehicle or component manufacturer, these guidelines must be followed when installing a coupling, tow eye or drawbar. This also applies to any maintenance or repair work carried out on these components.

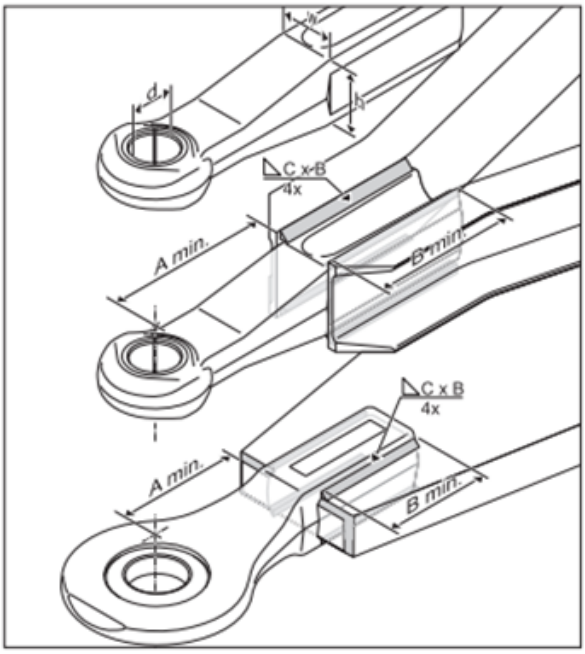

[3] Welding instructions

Where no manufacturer's installation guidelines exist, VSB #6 Section P1 gives clear, descriptive instructions on how to attach a coupling, tow eye or drawbar. In the absence of manufacturer's guidelines, the installation instructions given in VSB #6 P1 must be followed to comply with ADR 62/02.

For bolt-in drawbar eyes, the design and installation must provide adequate clearance to apply toque to the rear nut as per the manufacturer's instructions.

3.1.4 Coupling Installation:

Always refer to the OEM specifications for bolt torques (available from the following ITC members).

BPW Transpec (Ringfeder & VBG)
Website: https://bpwtranspec.com.au
Email: info@bpwtranspec.com.au

JOST Australia (Rockinger)
Website: http://jostaustralia.com.au/home.html
Email: sales@jostaustralia.com.au

Fuwa K Hitch (Fuwa K-Hitch)
Website: www.khitch.com.au
Email: melb@khitch.com.au

SAF-HOLLAND (V.Orlandi)
Website: www.safholland.com.au
Email: service@safholland.com.au

3.2 Inspection and Maintenance

3.2.1 Who should undertake inspections?

Detecting fatigue cracks in their early stages can be difficult as often the cracks are tightly closed and obscured by paint or dirt. It is important that inspections are undertaken by people appropriately qualified or experienced in identifying signs of fatigue cracking. In some cases, a non-destructive magnetic particle test would be appropriate.

3.2.2 When should inspections be undertaken?

During every service, an inspection should be undertaken of the critical areas of the coupling structure, tow eye shaft and where the coupling is connected to the drawbar A-frame. At least annually, a full drawbar inspection should be undertaken. The frequency of maintenance and inspection should be adjusted to suit the severity of the application, with more severe applications being inspected more frequently.

3.2.3 Pre-inspection preparation

Before each inspection, the equipment must be thoroughly cleaned so that dirt or other contaminants do not interfere with the inspection.

3.2.4 What causes fatigue cracking?

Fatigue cracking is started by repeated application of stress in the presence of stress concentrators such as changes in cross section, ends of welded-on reinforcing plates and roots of fillet welds.

3.2.5 What to look for

High risk areas include the tow eye shaft, coupling connection to the A-frame, changes in cross section, ends of welded-on reinforcing plates and roots of fillet welds.

Sometimes fretting wear from movement within fatigue cracks is revealed by a fine red rust residue on the surface.

Fatigue cracking can start in heavy sections such as drawbar eye shafts without showing distortion and is usually difficult to detect in painted or dirty structures as the cracks are tightly closed and difficult to see.

Repeated jack-knifing of a trailer beyond the limits of articulation of the coupling will contribute to fatigue cracking in the tow eye shaft – both welded in and bolt in designs. There may be no apparent distortion prior to final failure which can make fatigue cracking difficult to find.

If distortion of the A-frame has occurred, the coupling should be examined for cracks as well.

3.2.6 Specific points concerning WELDED DRAWBAR EYES

Welded drawbar eyes with reinforcement ending along the shaft should be inspected for fatigue cracks at the sides where the front of the reinforcement ends. Welds at the sides of a drawbar eye shaft welded onto a flat support should be inspected for cracks, particularly at the front end of the welds.

3.2.7 Specific points concerning BOLT-ON DRAWBAR EYES

The drawbar eye or securing washer and castellated nut should be inspected for looseness or movement, if any looseness or movement is detected then it should also be dismantled. There may be fine rust residue mentioned above. Fatigue cracks may start in the side of the drawbar shaft at the front end of the mounting block.

3.2.8 Specific points concerning FLANGED and CLAMPED DRAWBAR EYES

The towing eye should be inspected for looseness or movement. Loose bolts should be replaced because when bolts are loose as they become subject to bending stress which can start fatigue cracks in the threads.

3.2.9 Rear of drawbar structure

Inspect welds particularly at the ends of reinforcing gusset plates.

Inspections:

- Record (and file) all nut and bolt torques
- Check, record (and file) wear dimensions and wear limits

- Record photographic evidence (including assessment of superficial damage)

3.2.10 Component Wear Limits:
Refer to the NHVR-NHVIM - Section 3 Couplings and Section 14 Trailers:

3.3 Airlines
This TAP does not support the use of airline Susie coils with any drawbar trailer.

Where Susie coil airlines are used to provide air brake supply and control to drawbar trailing units, such as dollies, pig trailers or dog trailers, the use of Susie coils could potentially prevent the application of emergency brakes in a breakaway situation.

In a breakaway situation, Susie coils can stretch elastically for more than several metres, and this stretching may result in the airline necking and sealing preventing the venting of air from the supply line and the application of the emergency brakes.

The ATA's Industry Technical Council **recommends using non-elastic** (to an approved standard) **rubber brake line hoses with approved clamps for ALL drawbar trailer air service applications**.

Airlines should be as short as practical, however where safety chains are incorporated the airlines must be of adequate length such that in the event of a coupling disconnection the continued connection of the trailer, by the safety chains, does not activate the trailer emergency brakes and continues to allow control of the trailer service brakes.

- Be aware not to mix metric and imperial air fittings – refer *ITC Technical Bulletin 2020-03.*

- Airline Standards: Each component of the braking system must comply with the design and performance requirements of a relevant Australian Standard or British Standard; or a relevant standard approved by any of the following bodies:
    - American Society of Automotive Engineers
    - American National Standards Institute
    - Japanese Standards Association
    - Deutsches Institut für Normung
    - International Organisation for Standardisation.

3.4 Drawbar design and maintenance

ADR 62/.. requires that the drawbar must be securely attached to a substantial structural member of the trailer. The strength of the *'drawbar'* and its attachments must comply with the relevant clause/s and the *Drawbar* including the connections between the *Drawbar* and the trailer must withstand at least the relevant static or dynamic forces nominated in the ADR and when these forces are applied separately at the intended *'coupling'* centreline without incurring any residual deformation that would interfere or degrade the function of the assembly or any breaks, cracks, and separation of components.

DRAWBAR LENGTH: Horizontal distance from the centreline of the towing pivot to the centreline of the '*axle group*' of the trailer; or the centreline of leading '*axle group*' of a dog trailer.

3.4.1 Drawbar Visibility has long been a safety concern. More recently PBS dog trailers have been required to affix reflective conspicuity medium to the drawbar. However, there are no specific requirements and in-service assessment by the working group identified limited benefit, because if material is generally not parallel to the drawbar centreline and not vertical, reflecting away from the light source.

Accordingly, it is recommended that the reflective conspicuity medium be:

- at least $^{1}/_{3}$ the effective length of the drawbar frame "AF",
- But in any case, not less than 1^{metre} in length,
- Positioned centrally to the longitudinal length of the drawbar frame.
- A minimum of 100^{mm} high,
- Nominally parallel to the drawbar frame centreline (+/- 5 degrees) it may be necessary to provide a stepped attachment backing.
- Nominally vertical (+/- 5 degrees) to ground

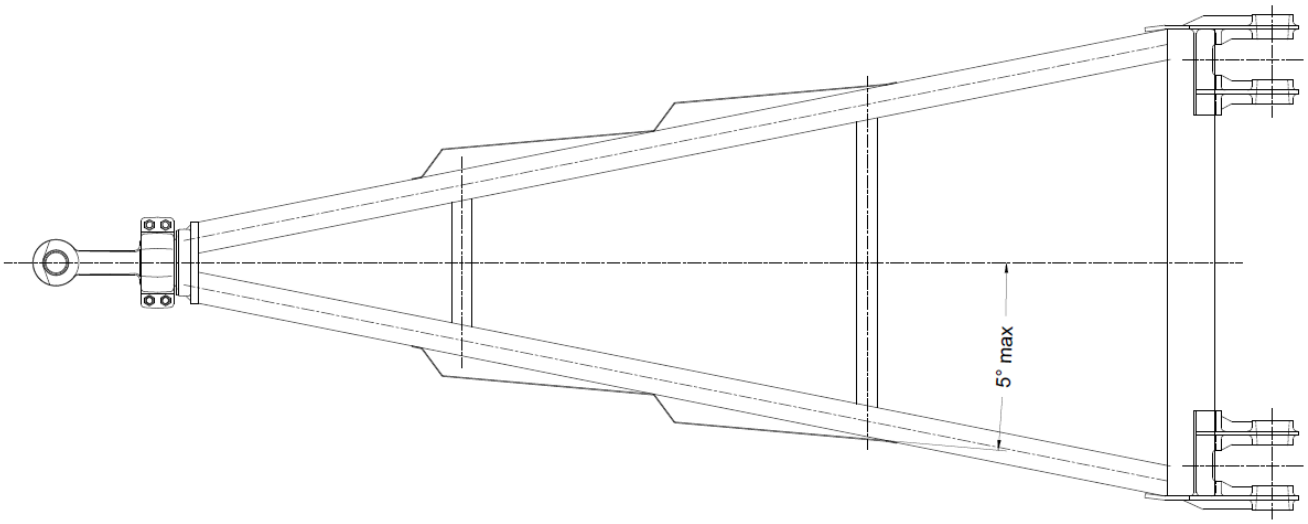

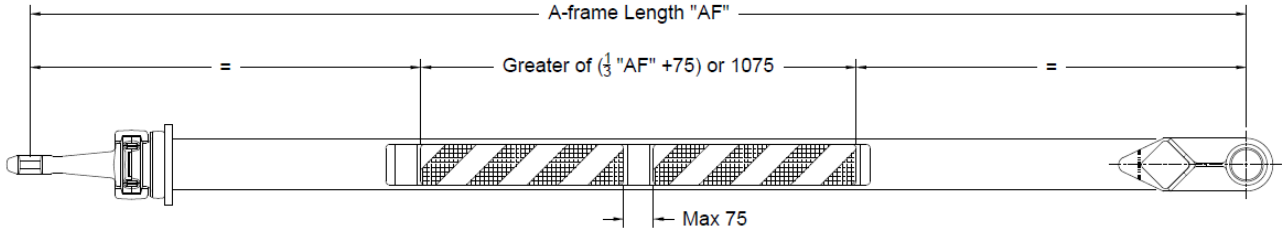

3.4.5 Towing eye wear limits: Drawbar eye bush new internal diameter 50.0^{mm}. Wear Limit internal diameter 51.5^{mm} (max).

3.4.6 Drawbar Bushes: For hinged drawbars, no obvious play/movement exceeding ± 5 mm may occur, and the movement must be equal on the right and left sides.

3.4.7 Drawbar Deformation: It is recommended that the maximum bowing/sagging/bending in any single plane be limited to less than $^{\text{TRUE LENGTH}}/_{100}$.

3.4.8 Notching, Dents and Gouging: The impact of damage from notching, dents or gouging may seem minor, however much of a drawbar may be highly stressed as a result seemingly minor damage can result in stress concentrations and fatigue. Such damage must be managed with due caution.

3.5 Safety Chains

ADR 62/.. requires that safety chains must be affixed to a substantial structural member on every trailer that is not fitted with an *'Emergency Brake System'* in accordance with ADR 38/… Trailer Brake Systems and on every *'drawbar'* of a rigid *'drawbar'* trailer except a *'converter dolly'*.

Clarification: Safety chains are NOT mandatory where a hinged drawbar is used on a dog trailer, pig trailer or any converter dolly.

Safety chains must be arranged so that:

- the chains are permanently attached to the trailer,
- when connecting to a towing vehicle the chains are crossed to support the draw bar and prevent it from dropping to the ground in the event of coupling failure or disconnection,
- the points of attachment to the trailer must be as near as practicable to the coupling and arranged to maintain direction of the trailer in the event of coupling failure or disconnection.

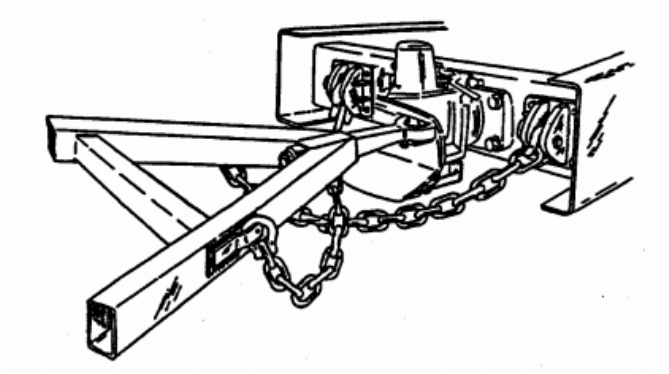

3.6 General

3.6.1 Dog Trailer - Dolly locks:

Reversing dog trailers can be challenging, especially a shorter wheelbase in combination with medium/longer length drawbar. Frequently “dolly locks” are used to assist, however for a laden dog trailer the drawbar forces can be significant, much higher than the ADR design requirements. Where the dolly includes an air suspension, suspension airbag pressure can be used to provide an interlock, limiting the dolly lock operation to only when the dolly is unladen or lightly laden. Refer to your air suspension supplier.

3.6.2 Drawbar Articulation Limits:

Many tow couplings, tow eyes and drawbars are damaged during manoeuvres including reversing. Detection devices and visual reference indicators may be used to assist operators when operating near the articulation limit. Consult with your supplier for options.

3.6.3 Driver training:

There are significant benefits to driver training. Better trained, more confident drivers help reduce vehicle, repair; legal; insurance; administrative and other costs associated with accidents and incidents.

3.6.4 Side Underrun Protection:

The ATA ITC has developed a Technical Advisory Procedure for Side Underrun Protection. Whilst this TAP is advisory and voluntary, the drawbar (especially on dog trailers) can be hazardous. The SUP-TAP provides guidance for the trailer.

3.6.5 Tow coupling components:
Operators are urged to record details of tow couplings and towing eyes and maintain on records. Manufacturer ID Tags suffer in-service damage (even from normal operations) often making the data unreadable.

4. COUPLING AND UNCOUPLING:

4.1 Coupling

Step 1: General Preparation

4.1.1.1 Prior to starting or moving the towing vehicle/s, ensure that the towing vehicle airline isolation taps (where fitted) are closed; and,
4.1.1.2 That the air couplings and electrical & EBS service connectors (and hydraulic services if fitted) are in good condition, clean, and compatible.
4.1.1.3 Visually check the condition of the coupling for damage
4.1.1.4 Check that the tow coupling (as appropriate to coupling type) is “set” for coupling engagement.

Step 2: Trailer check

4.1.2.1 Check that the airlines and electrical & EBS services (and hydraulic services if fitted) are in good condition, clean, compatible, and not fouled, nor likely to foul, not crossed and are “positioned” to be clear of the trailer coupling.
4.1.2.2 Visually check the condition of the coupling.

Step 3: Towing vehicle

4.1.3.1 Enter towing vehicle (or prime mover for multiple trailer applications) and reverse the towing vehicle into position, ensuring it is aligned in front of the trailer, stopping before the coupling contacts the trailer.
4.1.3.2 Apply the prime mover/combination parking brake.
4.1.3.3 Visually confirm that the drawbar is at an appropriate height for coupling engagement. Adjust as necessary.

Step 4: Trailer coupling

4.1.4.1 Reverse towing vehicle (slowly) in accordance with coupling manufacturers coupling guidelines.
4.1.4.2 Connect coupling as per manufacturers guidelines.
4.1.4.3 Visually check connection including automatic primary and secondary locks.
4.1.4.4 Connect Safety Chains (crossed) where fitted.
4.1.4.5 Depending on landing leg style, raise landing leg/support until clear of the ground.
4.1.4.6 Complete Tug Test – minimum once or as per company policy/procedures.
4.1.4.7 Park the towing vehicle (including trailer parking brakes)
4.1.4.8 Raise landing leg and securely stow.
4.1.4.9 Check that the trailer air supply (RED) line is not pressurised: Then connect,

- Brakes air supply (RED) line
- Brakes air control (BLUE) line
- Electrical (lights)
- ABS/EBS
- Ancillaries (hydraulics etc).

4.2 Uncoupling

Step 1: General Preparation

4.2.1.1 Before commencing uncoupling, ensure that the towed trailer is on a firm surface and adequate to support the trailer landing gear and its load.
4.2.1.2 The drawbar landing legs may have a high ground loading and extra care should be taken that they are adequately supported when parked.
4.2.1.3 Ensure the towing vehicle and trailer are in a straight line and on level ground.

Step 2: Trailer uncoupling

4.2.2.1 Always disconnect the trailer brake air supply line (RED) first.
4.2.2.2 Then turn off all air supply isolation taps (if fitted).
4.2.2.3 Then disconnect:

- Brakes air control (BLUE) line
- Electrical (lights)
- ABS/EBS
- Ancillaries (hydraulics etc)
- Ensure air lines electrical leads etc are appropriately stowed.

4.2.2.4 Lower/set drawbar landing leg as appropriate.

Step 3: Coupling disconnection

4.2.3.1 Ensure all trailer services are disconnected and appropriately stowed.
4.2.3.2 Ensure that drawbar landing leg/s are lowered to the support position; and, that the drawbar will be adequately supported.
4.2.3.3 Release (uncouple) coupling in accordance with coupling OEM procedures.

Step 4: Moving clear of the trailer

4.2.4.1 Enter towing vehicle (or prime mover for multiple trailer applications) and slowly move forward away from the trailer.
4.2.4.2 Park the tow vehicle in an appropriate location and apply the vehicle parking brake and secure the vehicle.

Whenever a combination has been parked in a public place or in a non-secured location unattended, before proceeding always ensure that the trailer coupling is positively engaged and the primary and secondary locks are visually checked; and that all trailer services are connected.

5. SAFETY CONSIDERATIONS

REMEMBER:

- Always follow the latest approved procedures and wear personal protective equipment
- Avoid distractions and be aware of surroundings – ensure full attention is maintained when undertaking work tasks
- Be aware of current safety procedures and obey all relevant safety signs, stickers, and tags
- Comply, so far as the worker is reasonable able, with any reasonable instruction that is given by the 'person conducting the business or undertaking' (PCBU) to allow the PCBU to comply with the WHS Act and the Work Health and Safety Regulations (WHS Regulations)
- Co-operate with any reasonable policy or procedure of the PCBU relating to health or safety at the workplace that has been notified to workers.
- If a distraction or interruption has occurred – retrace or revisit process until you can confirm what step has been completed correctly, re-continue process from this point.
- If in doubt, contact your supervisor or manager for instruction, guidance, or training.
- Keep things in perspective. Hazards may be limitless, focus on the most likely risks as first value.
- Never take shortcuts or risks on safety procedures.
- Report all unsafe conditions, injuries or near misses immediately.
- Take reasonable care for your own health and safety and the health and safety of others